- ASTM B108 ALLOY 356-T6 △1

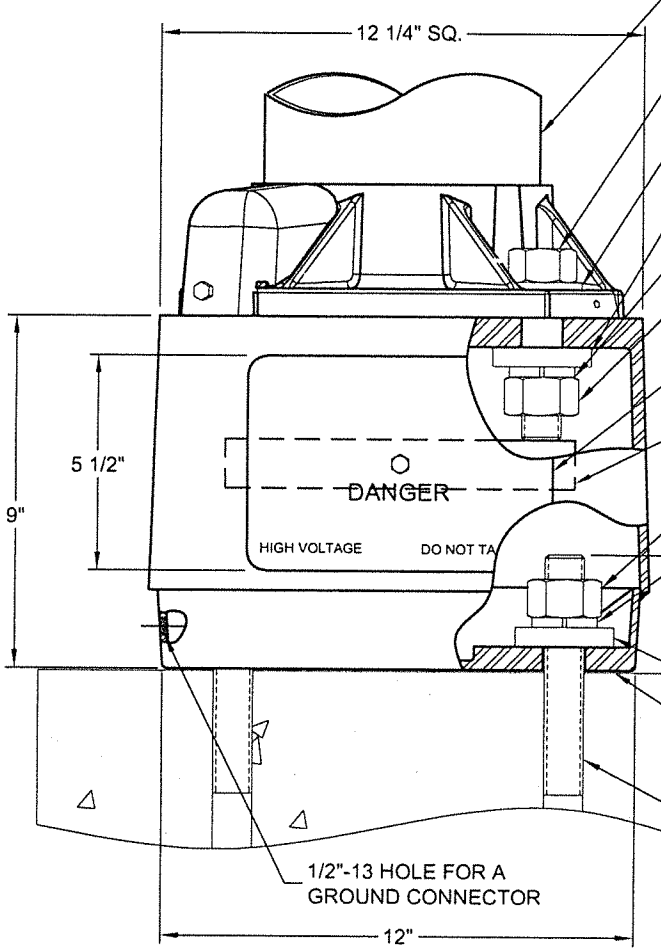

7" DIA. ALUMINUM SHAFT & CAST ALUMINUM ANCHOR BASE

(4) 1"-8 x 4" LG. GALVANIZED HEX HEAD BOLTS

(4) 1" I.D. x 2" O.D. GALVANIZED FLAT WASHERS

(4) 1 1/16" I.D. x 2 3/4" O.D. x 1/2" THK. GALVANIZED FLAT WASHERS

(4) 1" I.D. GALVANIZED SPLIT-LOCK WASHERS

(4) 1"-8 GALVANIZED HEAVY HEX NUTS

7 3/4" WIDE CAST ALUMINUM TRANSFORMER BASE DOOR SECURED WITH (1) 1/4"-20 x 3/4" LG. HEX HEAD BOLT

1/4" x 1 1/4" ALUMINUM STRAP WITH NYLON BUSHING

(4) 1"-8 HEAVY HEX NUTS (BY OTHERS)

(4) 1" I.D. GALVANIZED SPLIT-LOCK WASHERS

3" BOLT PROJECTION

(4) 1 1/16" I.D. x 2 3/4" O.D. x 1/2" THK. GALVANIZED FLAT WASHERS

(4) 1.75 x .063" THK. KANSAS LEVELING SHIMS

(4) 1"-8 ANCHOR BOLTS (BY OTHERS)

1/2"-13 HOLE FOR A GROUND CONNECTOR

IMPORTANT NOTE:
TRANSFORMER BASE AND POLE TO BE LEVELED AS ONE UNIT, USING LEVELING SHIMS IF REQUIRED.

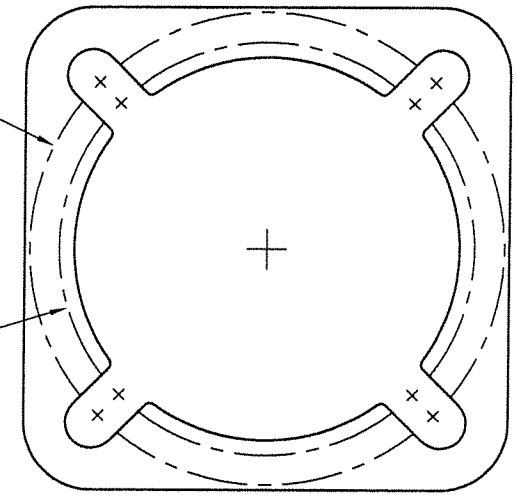

TOP BOLT CIRCLE

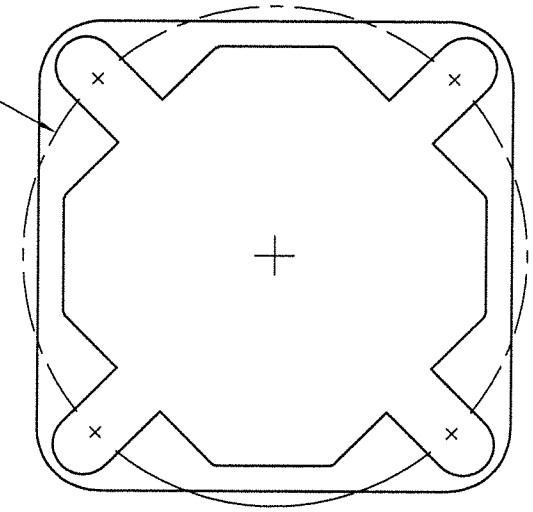

BOTTOM BOLT CIRCLE

TYPE OP CS-300 T-BASE

DO NOT SCALE

(REF. TB2) CS-300 **CAUTION** 1985 AASHTO

BEFORE THE INSTALLATION OF THIS BASE IN SERVICE, USER SHOULD ALWAYS CONSULT WITH AUTHORIZED DISTRIBUTOR REGARDING PROPOSED APPLICATION. LOADING TO BE SUSTAINED AND INSTALLATION INSTRUCTIONS. FAILURE(S) CAN RESULT FROM MISAPPLICATION, OVERLOADING/IMPROPER LOADING OR INCORRECT INSTALLATION.

TO APPROACH OPTIMUM STATIC LOADS, USE THE LARGEST POSSIBLE BOLT CIRCLES AND USE STEEL WASHER SIZES SPECIFIED BELOW:

FOR 10 1/2" THRU 12" DIA. TOP BOLT CIRCLES

FOR 10" THRU 12 3/4" DIA. BOTTOM BOLT CIRCLES

USE 2 3/4" DIA. X 1 1/16" OR 1 5/16" I.D. X 1/2" TK. WASHERS TOP AND BOTTOM

FOR OPTIMUM PERFORMANCE, MOUNT TRANSFORMER BASE ON A FLAT AND LEVEL FOUNDATION SURFACE. SHIM BASE WHEN REQUIRED. IF GAPS ARE PRESENT, THOROUGHLY FILL VOIDS WITH A NON-SHRINK GROUT. TORQUE GROUND MOUNTING NUTS TO 150 FT. LBS.

BREAKAWAY BASE
APPROVED BY F.H.W.A. TO 1985 AASHTO REQUIREMENTS

valmont

Valmont Industries, Inc. Structures Division
20805 Eaton Ave Farmington, Minnesota 55024-7932
Phone: (651) 463-8990 (800) 899-7577
Fax: (651) 463-3349

TITLE:	S TBASE 11.5"-12.5" KANSAS 7" 9"
MODEL NO.:	07R115125B9K
MATERIAL:	ALUMINUM ALLOY
FINISH:	SATIN FINISH
PROJECT:	
SOLD TO:	CITY OF OVERLAND PARK, KS
SHIP TO:	
P.O. NO:	
REP:	POWER EQUIPMENT SALES
QTY:	
DWN BY:	PVB
CHK'D BY:	
APPR BY:	MP
DATE:	09-22-17
DWG NO:	DSOP
PAGE:	15 / 18

REV	DATE	REVISION DESCRIPTION	BY
△			
△			
△1	04/06/18	ADDED NOTE	KPS

- ASTM B108 ALLOY 356-T6 △1

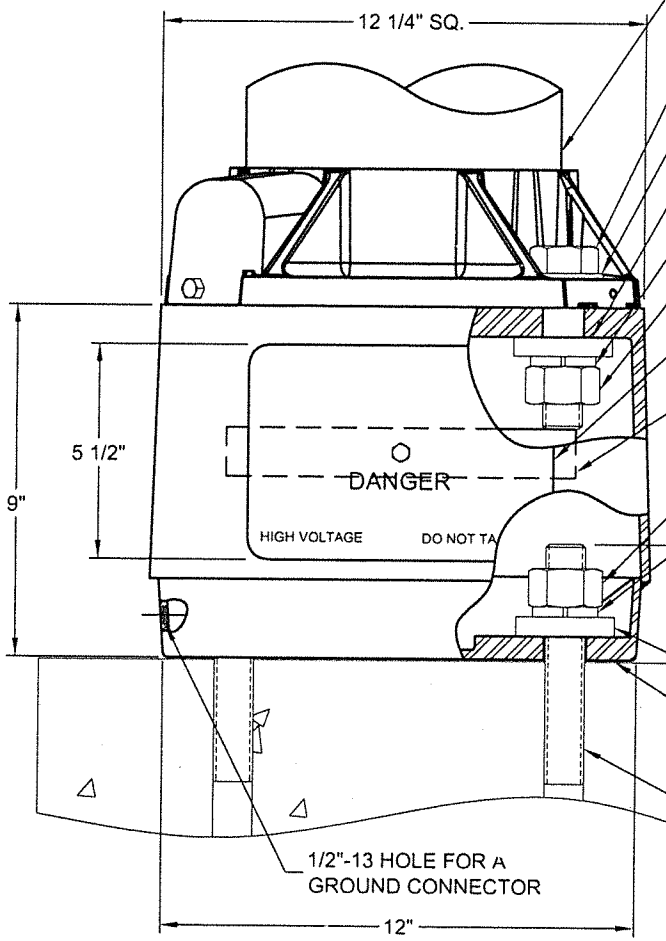

8" DIA. ALUMINUM SHAFT & CAST ALUMINUM ANCHOR BASE

(4) 1"-8 x 4" LG. GALVANIZED HEX HEAD BOLTS

(4) 1" I.D. x 2" O.D. GALVANIZED FLAT WASHERS

(4) 1 1/16" I.D. x 2 3/4" O.D. x 1/2" THK. GALVANIZED FLAT WASHERS

(4) 1" I.D. GALVANIZED SPLIT-LOCK WASHERS

(4) 1"-8 GALVANIZED HEAVY HEX NUTS

7 3/4" WIDE CAST ALUMINUM TRANSFORMER BASE DOOR SECURED WITH (1) 1/4"-20 x 3/4" LG. HEX HEAD BOLT

1/4" x 1 1/4" ALUMINUM STRAP WITH NYLON BUSHING

(4) 1"-8 HEAVY HEX NUTS (BY OTHERS)

(4) 1" I.D. GALVANIZED SPLIT-LOCK WASHERS

3" BOLT PROJECTION

(4) 1 1/16" I.D. x 2 3/4" O.D. x 1/2" THK. GALVANIZED FLAT WASHERS

(4) 1.75 x .063" THK. KANSAS LEVELING SHIMS

(4) 1"-8 ANCHOR BOLTS (BY OTHERS)

1/2"-13 HOLE FOR A GROUND CONNECTOR

IMPORTANT NOTE:
TRANSFORMER BASE AND POLE TO BE LEVELED AS ONE UNIT, USING LEVELING SHIMS IF REQUIRED.

DO NOT SCALE

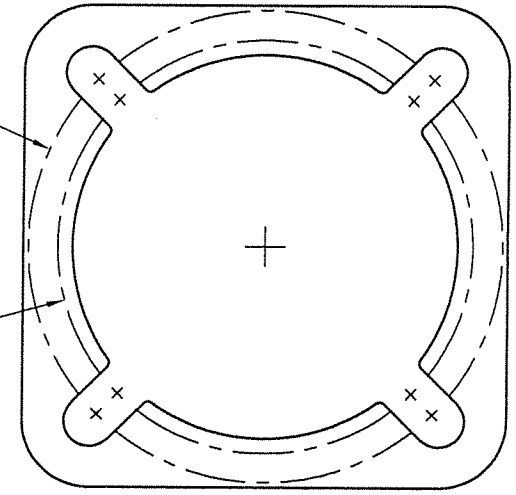

TOP BOLT CIRCLE

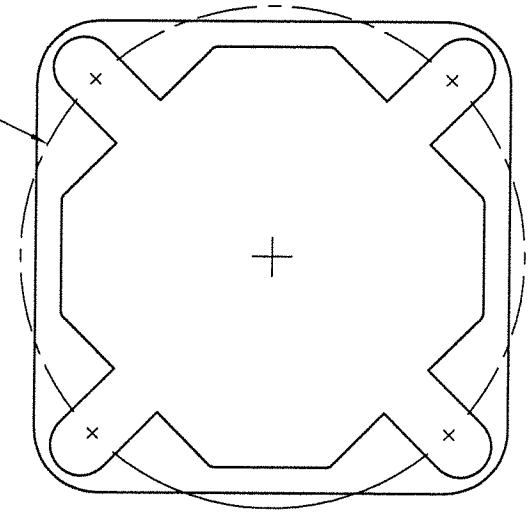

BOTTOM BOLT CIRCLE

(REF. TB2) CS-300 **CAUTION** 1985 AASHTO

BEFORE THE INSTALLATION OF THIS BASE IN SERVICE, USER SHOULD ALWAYS CONSULT WITH AUTHORIZED DISTRIBUTOR REGARDING PROPOSED APPLICATION, LOADING TO BE SUSTAINED AND INSTALLATION INSTRUCTIONS. FAILURE(S) CAN RESULT FROM MISAPPLICATION, OVERLOADING/IMPROPER LOADING OR INCORRECT INSTALLATION.

TO APPROACH OPTIMUM STATIC LOADS, USE THE LARGEST POSSIBLE BOLT CIRCLES AND USE STEEL WASHER SIZES SPECIFIED BELOW:

FOR 10 1/2" THRU 12" DIA. TOP BOLT CIRCLES

FOR 10" THRU 12 3/4" DIA. BOTTOM BOLT CIRCLES

USE 2 3/4" DIA. X 1 1/16" OR 1 5/16" I.D. X 1/2" TK. WASHERS TOP AND BOTTOM

FOR OPTIMUM PERFORMANCE, MOUNT TRANSFORMER BASE ON A FLAT AND LEVEL FOUNDATION SURFACE. SHIM BASE WHEN REQUIRED. IF GAPS ARE PRESENT, THOROUGHLY FILL VOIDS WITH A NON-SHRINK GROUT. TORQUE GROUND MOUNTING NUTS TO 150 FT. LBS.

BREAKAWAY BASE
APPROVED BY F.H.W.A. TO 1985 AASHTO REQUIREMENTS

valmont

Valmont Industries, Inc. Structures Division
20805 Eaton Ave Farmington, Minnesota 55024-7932
Phone: (651) 463-8990 (800) 899-7577
Fax: (651) 463-3349

TITLE:	S TBASE 11.5"-12.5" KANSAS 8" 9"
MODEL NO.:	08R115125B9K
MATERIAL:	ALUMINUM ALLOY
FINISH:	SATIN FINISH
PROJECT:	
SOLD TO:	CITY OF OVERLAND PARK, KS
SHIP TO:	
P.O. NO:	
REP:	POWER EQUIPMENT SALES

REV	DATE	REVISION DESCRIPTION	BY
△			
△			
△1	04/06/18	ADDED NOTE	KPS

QTY:	
DWN BY:	PVB
CHK'D BY:	
APPR BY:	MP
DATE:	09-22-17
DWG NO:	DSOP
PAGE:	16 / 18

TYPE OP CS-300 T-BASE